FR GUIDE D'INSTALLATION ET D'UTILISATION

GB DIRECTION FOR USE

ES MODO DE EMPLEO

DE GEBRAUCHSANWEISUNG

IT ISTRUZIONI PER L'USO

DK BRUGSANVISNING

PT MODO DE UTILIZACÃO

PL INSTRUKCJI

Teppan Yaki DTE768X

De Dietrich

GB EDITO

De Dietrich

Dear Client,

You have just acquired a DE DIETRICH teppan yaki; thank you for your purchase.

Our research teams have designed a new generation of appliances with you in mind. Their quality, design and state-of-the-art technology incorporate our unique know-how that makes these products exceptional.

DE DIETRICH products include a wide range of ovens, microwave ovens, glass-ceramic cook tops, vented hoods, built-in dishwashers and refrigerators that you can match to your new DE DIETRICH teppan yaki.

Our consumer department is of course at your service, because we want to do our best to meet your expectations with regard to our products. We will be happy to respond to your questions or suggestions. (Please see the form for coordinating your questions at the end of this booklet).

www.dedietrich-electromenager.com

These "new valuables" serve as landmarks in our daily lives – DE DIETRICH, a reference for excellence, extends an invitation to join a new art of living.

The DE DIETRICH trademark.

GB INDEX

	PAGE
1 / INSTALLATION INSTRUCTIONS	13
2 / FITTING	14
3 / PUTTING INTO SERVICE	16
4 / SOME HINTS	18
5 / MAINTENANCE	20

Disposal of old electrical appliances

The European Directive 2002/96/EC on Waste Electrical and Electronic Equipment (WEEE), requires that old household electrical appliances must not be disposed of in the normal unsorted municipal waste stream. Old appliances must be collected separately in order to optimise the recovery and recycling of the materials they contain and reduce the impact on human health and the environment.
The crossed out “wheeled bin” symbol on the product reminds you of your obligation, that when you dispose of the appliance it must be separately collected.

Consumers should contact their local authority or retailer for information concerning the correct disposal of their old appliance.

GB 1 / INSTALLATION INSTRUCTIONS

- The appliance must be connected by an approved engineer in accordance with the regulations in force.

- The installer is responsible for the good operation of the appliance. He must explain its operation to the user, with the aid of this manual.

- The appliance is connected to the mains via a single-phase electric cable. The plug must remain accessible.

- It is also necessary to provide a bipolar cut-off device in your power supply circuit, where the opening of the contacts is more than 3 mm.

- A 16-ampere fuse is necessary.

- Your teppan yaki uses 2.500 watts. It is therefore absolutely necessary for your electric wiring system to be able to supply that power without danger.

- Your teppan yaki **MUST** be connected to earth.

Cooking with the teppan yakki necessarily involves the emission of fumes. This factor will have to be taken into account when choosing the place where your grill is to be fitted.

IT IS ABSOLUTELY IMPERATIVE TO LEAVE A SPACE OF AT LEAST 5 CM BETWEEN THE BOTTOM OF THE TEPPAN YAKI AND THE FIRST SHELF OF THE KITCHEN UNIT.
DO NOT STORE INFLAMMABLE GOODS IN THE SPACE BELOW THIS APPLIANCE.

- ***Electrical connection :***

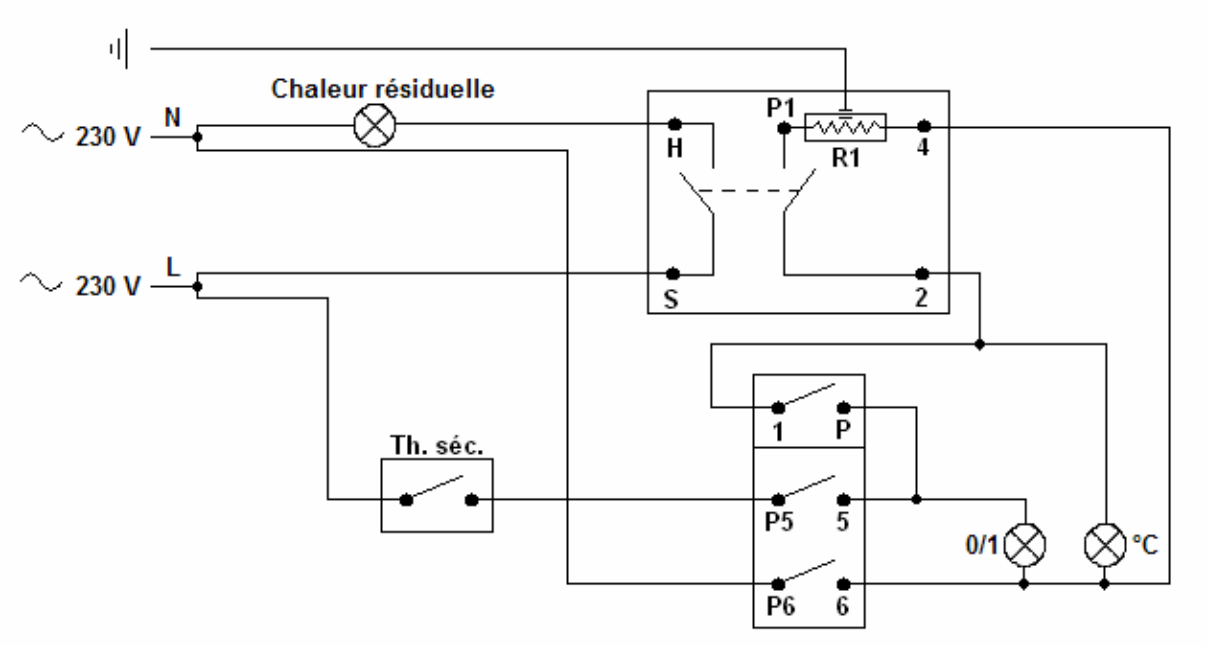

GB 2 / FITTING

This teppan yaki is built into a work surface or kitchen unit by simply cutting a hole the corresponding shape.
Any support may be suitable: brickwork, timber, metal, granite, laminate, etc.

Dimensions of appliance:	520 x 380 mm
Dimensions of hole cut in work surface:	490 x 340 mm

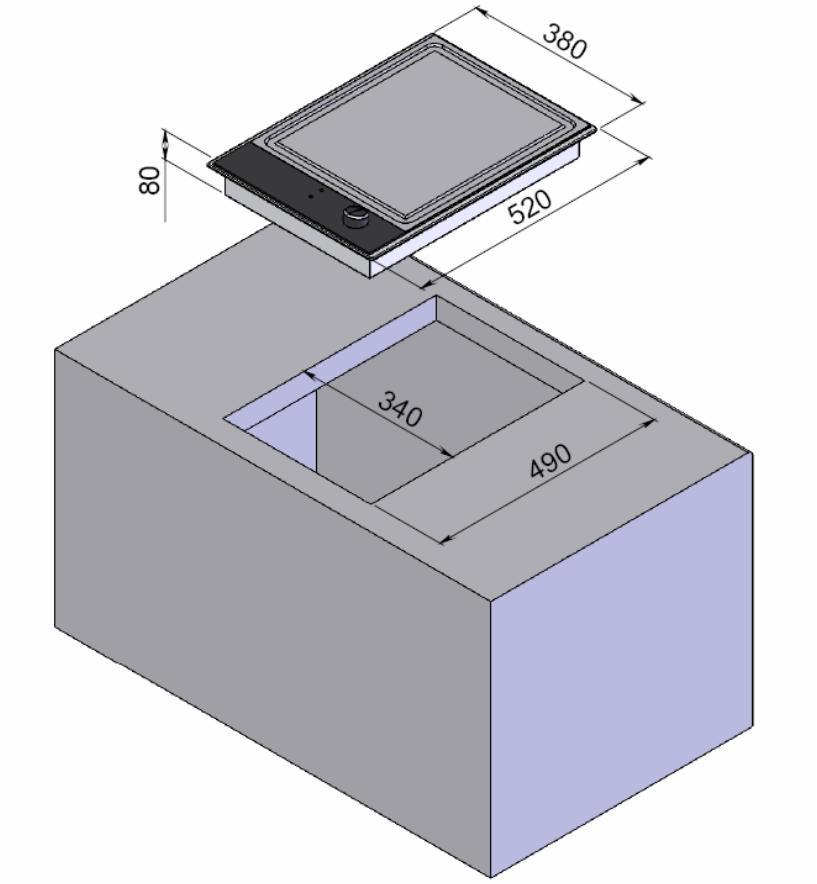

The appliance is fixed to the work surface with four fixing pins delivered in the package.

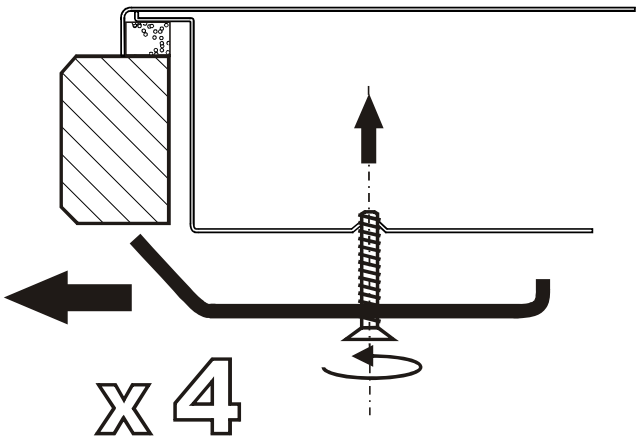

GB 3 / PUTTING INTO SERVICE

- ***Special precautions:***

This appliance is exclusively intended for domestic use. Any other use will nullify the guarantee.

Do not forget that the teppan yaki reaches very high temperatures when operational.

Never leave the appliance in operation without supervision.

Do not allow children to operate the appliance.

No guarantee will be given for damage caused by non-observance of this document.

This appliance complies with the EN 60335-2-6 standard with regard to the heating of cabinets.

- ***The controls :***

The control knob enables you to regulate the cooking temperature.

The warning lights give you information on the operation of the appliance.

	This warning light shows when the appliance is ON.
	This warming light turns off when the selected temperature is reached.
	This warming light enables you to check the residual heat of the cooking panel.

GB 3 / PUTTING INTO SERVICE

- ***<u>The appliance :</u>***

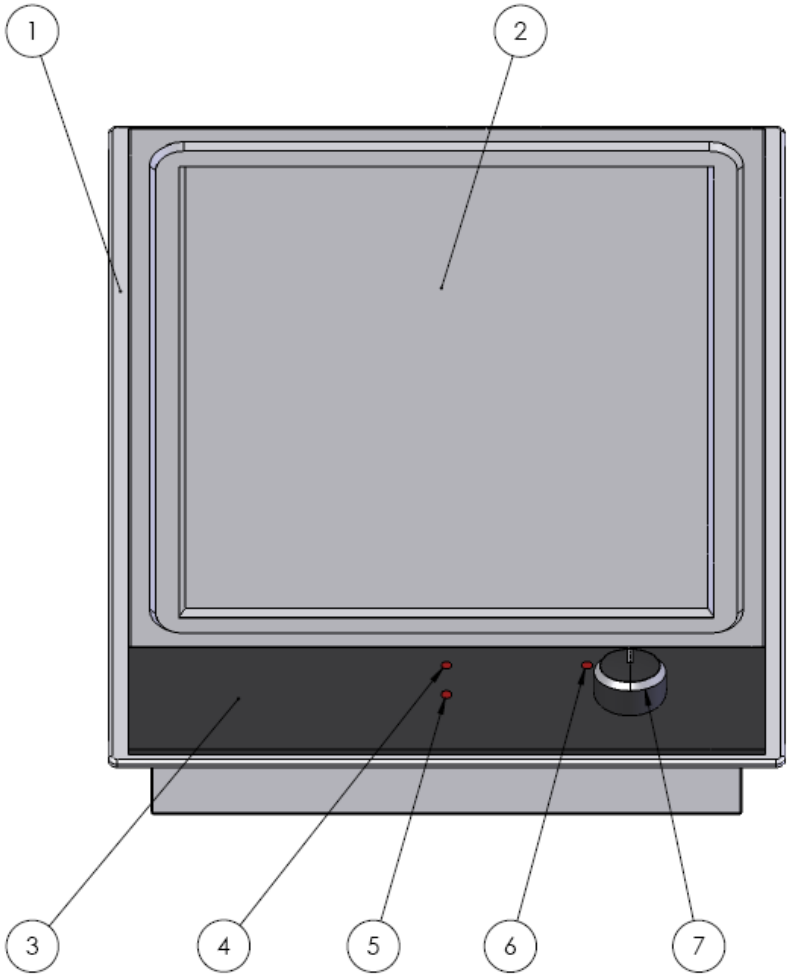

1 fitting plate
2 stainless steel
3 glass dashboard
4 residual heat warning light
5 ON/OFF warning light
6 Heating warning light
7 thermostate knob

GB 4 / SOME HINTS

Before any utilization, preheat for 5 to 10 minutes.

The position of the knob is indicative, according to the type of food to be cooked. It may vary in relation to the quantity used, and the personal taste of the consumer.

Thermostat position	Preparation	Cooking time	Observations
90°	Dish-warmer	-	Place the plate onto the appliance
210°	Toasted bread	4 min.	2 min. on each side
180°	Caramelised pineapple slices, brochettes of fruit	9 min.	Turn every 3 min.
170°	Half-tomatoes, mushrooms, onion slices	6 – 8 min.	Turn every 3-4min.
170°	Fresh salmon steaks, trout, sole, scampi	8 – 10 min.	4 – 5 min. on each side
180°	Sausages	10 min.	Turn every 3 min.
180°	Brochettes of meat	12 – 15 min.	Turn every 3 min.
180°	Rare beef	4 – 6 min.	2 – 3 min. on each side
180°	Well-done beef	10 – 12 min.	Turn every 4 min.

GB 4 / SOME HINTS

The teppan yaki can also be used to provide an ideal "large hob" for simmering.
Use a general purpose pot that is the same size as the cooking surface.

- Depending on the amount being cooked, the simmering will stabilise between the 90° and 130° positions.
- Cover the pot to maintain the moisture; remove it to reduce moisture.

This type of application is ideal to prepare:

- beef stew
- carbonnades
- blanquette
- stewed rabbit in beer
- beef tongue…

Each time after use, ensure that the control knobs are returned to position 0.

5 / MAINTENANCE

- ***Cooking panel:***

- appliance must be warm +/-65°.
- scrape off any solid residue with the help of a spatula or scraper.
- moisten the cooking surface with cold water.
- rub the cooking surface with the help of a scouring sponge and a bit of soap.
- sponge down and rinse with the help of the same scouring sponge.
- once the surface is clean, dry with a paper towel.

- ***Fitting plate:***

The fitting plate will be cleaned with the aid of a cleaning material suitable for stainless steel. It will thus keep its sparkling appearance. Avoid scourers and abrasive detergents.

- ***Glass motherboard:***

Clean it regularly with a damp cloth on which you may spray a little of a product intended for glass-cleaning.

Do not clean the equipment with a pressure or steam cleaner, since you risk creating a short-circuit!